REAR AXLE SHAFT

COMPONENTS
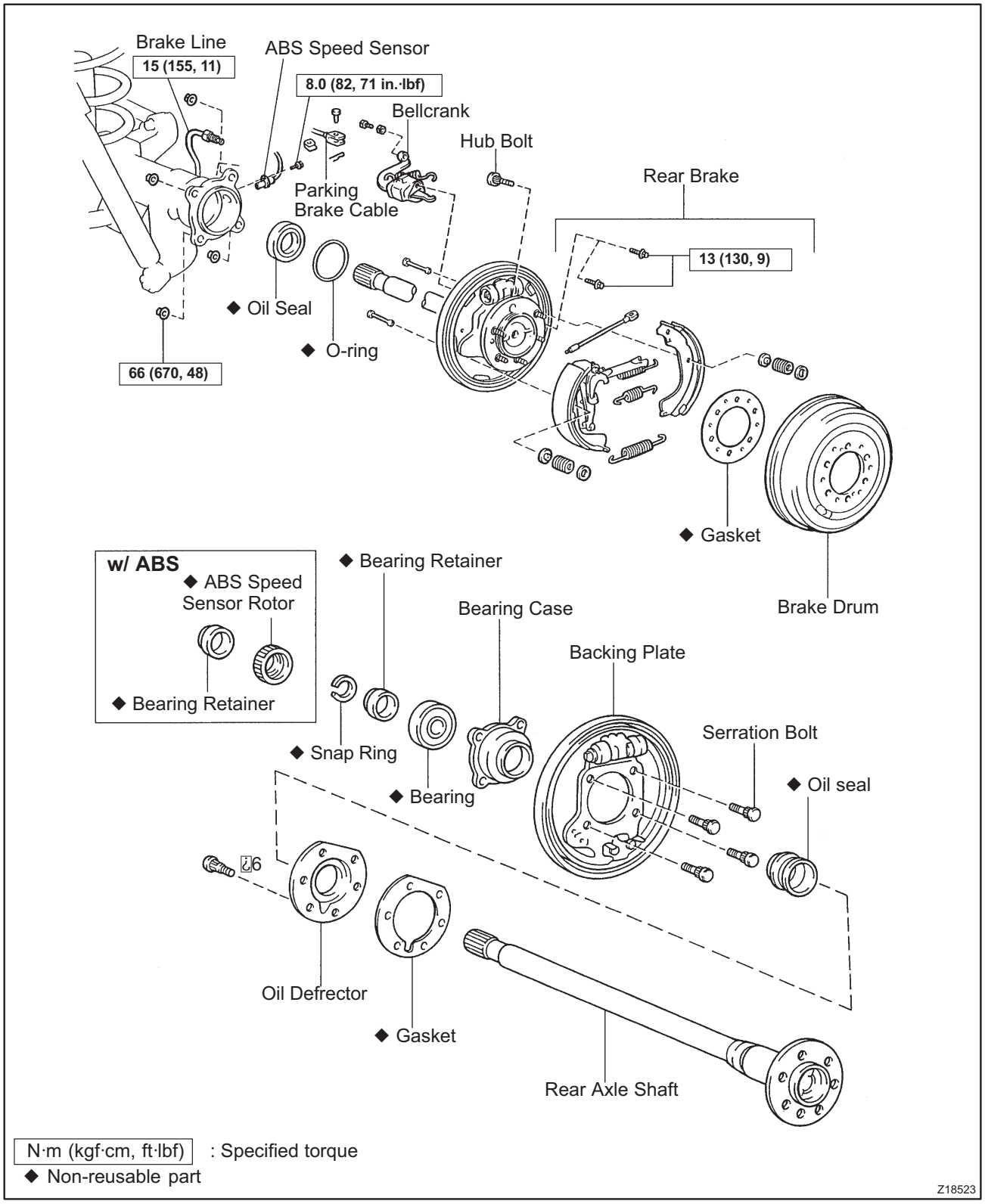
SA069-02